TECHNICAL DATA SHEET

TEMPERATURE RECORDER

NF EN 12830

CTS-1P

Temperature

RANGE BENEFITS

- Integrated configuration and visualization software as PDF file
- Memory capacity of 50,000 stitches
- Up to 2 storable parameters
- 2 programmable alarm thresholds
- 1 ligne LCD display
- Magnetic attachment
- IP65 device

TECHNICAL FEATURES

Units displayed	°C, °F
Resolution	0.1 °C, 0.1 °F
External input	USB connector
Internal sensor	Temperature
Alarms	2 thresholds by recording channels
Recording rate	From 1 min to 24 h
Use temperature	From -40 to +70 °C
Storage temperature	From -40 to +85 °C
Autonomy	3 years*
European directives	2011/65UE RoHS II ; 2012/19/UE DEEE ; 2004/108/CE CEM ; 2006/95/CE

** For a recording rate of 15 minutes at 25°C*

DEVICE

Dimensions
100 x 42.5 x 15.9 mm

Weight
53 g

Display
1 ligne LCD display
Active screen Dimensions : 32 x 25.5 mm

Control
1 OK key
1 Select key

Materials
Compatible with agrifood environment
ABS housing

Protection level
IP65

PC communication
1 male USB A input

Battery powered
1 x CR2450 (battery)

Environnemental conditions of use
Air and neutral gases Hygrometry: from 0 to 95%RH Maximum altitude: 2000 m

TECHNICAL FEATURES

CTS-1P

- INNER SENSOR

Type of sensor	CTN
Span	From -40 to +70 °C
Accuracies	±0.4 °C (-20 °C<T<+70 °C)±0.8 °C (outside)

** The accuracies presented in this document are established under laboratory conditions. They will be maintained subject to applying the calibration compensations or to returning to identical conditions.*

DIMENSIONS (mm)

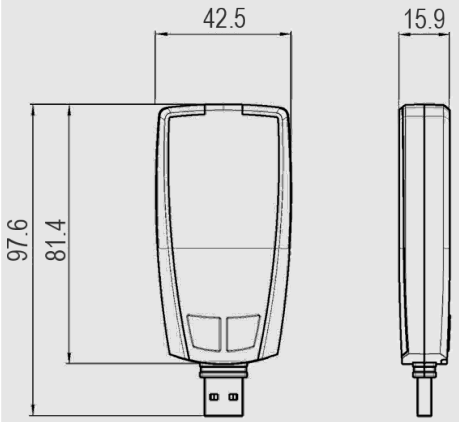

RECORDER FUNCTIONS

The CTS-1P allows to record the measured values in "snapshot", it records the values according to a predefined interval. On the other hand, it is possible to operate the CTS-1P continuously through loop recording.

Three types of campagin launch

The measurement campaign can be launched:

- either deferred (according to a fixed date and time)
- either by the software
- either by button

Five conditions for stopping recording

The measurement campaign can be stopped:

- According to a date and time if the measurement campaign was launched according to a date and time
- According to a recording duration
- According to a defined number of records
- If the memory storage capacity is reached
- By a long press of 5 seconds on the "OK" key if this function has been activated by the software

CONNECTIONS

PC connection input

DISPLAY

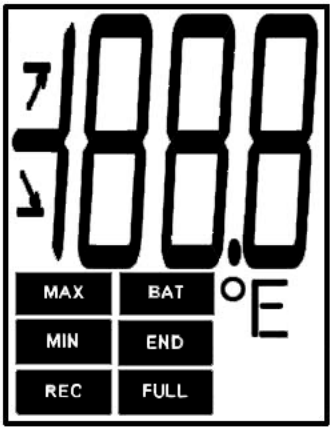

END *Indicates that the campaign has ended*

REC *Stores values at the time this indicator appears / flashing: campaign has not started yet*

FULL *Slow Blinking: Campaign at 80-90% storage capacity*
Fast Blinking: Campaign at 90-100% storage capacity
Constant: storage capacity reached0

BAT *Stays lit on the screen: indicates that the batteries need to be changed.*

MIN **MAX** *The values displayed are the maximum/minimum values recorded for the displayed channels*

Indicator of the direction of exceeding the threshold

°C *Temperature in degrees Celsius*

°F *Temperature in degrees Fahrenheit*

SOFTWARE

- **Embedded software as PDF file**
  Allows the edition of a campaign report and the configuration of the recorde

ACCESSORIES

- 1 CR2450 battery

Only the accessories supplied with the device should be used

CALIBRATION

A calibration certificate is available as an option in paper format.
We recommend calibration once a year.

MAINTENANCE

Avoid all harsh solvents.
When cleaning with formalin-based products (parts or ducts), protect the device and the probes.

GUARANTEE

The appliances are guaranteed for 2 years on parts and labour, factory return.

PRECAUTIONS FOR USE

Make sure to always use the device in accordance with the intended use and within the limits of the parameters described in the technical characteristics so as not to compromise the protection provided by the device.

FIXATION

The CTS-1P has a magnetic attachment, so you can easily attach your miniature recorder.

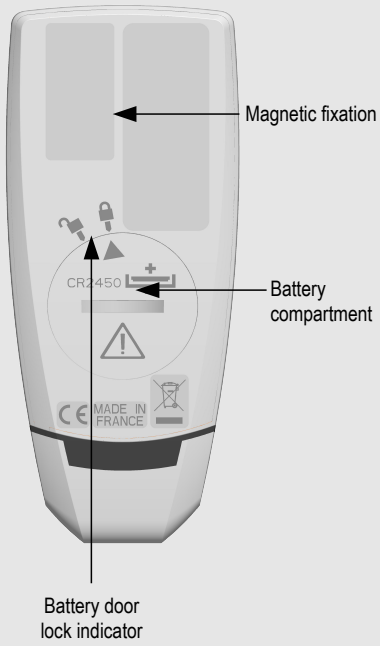

INSERTING THE BATTERIES

With a 3-year battery life*, the CTS-1P ensures long-lasting recordings.

To change the battery:

- Unlock the battery compartment using a screwdriver or a coin.
- Insert the battery (CR 2450 butotn battery) so that the pole + is visible.
- Replace the battery cover so that the indicator is placed at the level of the open padlock and close it by turning it to the right in order to make the indicator correspond to the level of the closed padlock.

** For a recording rate of 15 minutes at 25°C*

WARNING ! Material damage may occur, apply the precautionary measures indicated.

Do not dispose of your electronic device with household waste. Return it at the end of its useful life. In accordance with European WEEE directives, we provide separate collection for environmentally friendly treatment.

FT_medifroid_CTS-1P– 08/01/16 – Subject to technical modifications of the devices.

médifroid
le spécialiste du froid médical
8/10 rue des Blés • 93210 La Plaine Saint Denis
Tél : +33(0)1 49 98 01 01 • FAX : +33(0)1 49 98 00 11
http://www.medifroid.com